REV	ECN	DESCRIPTION	BY/DATE	CHK	APPR
B	10271	MATERIAL IS: 304L STAINLESS STEEL WAS: TITANIUM ALLOY	RLA 8/16/13	MH	AS

MODEL 3145A
STUD MOUNT

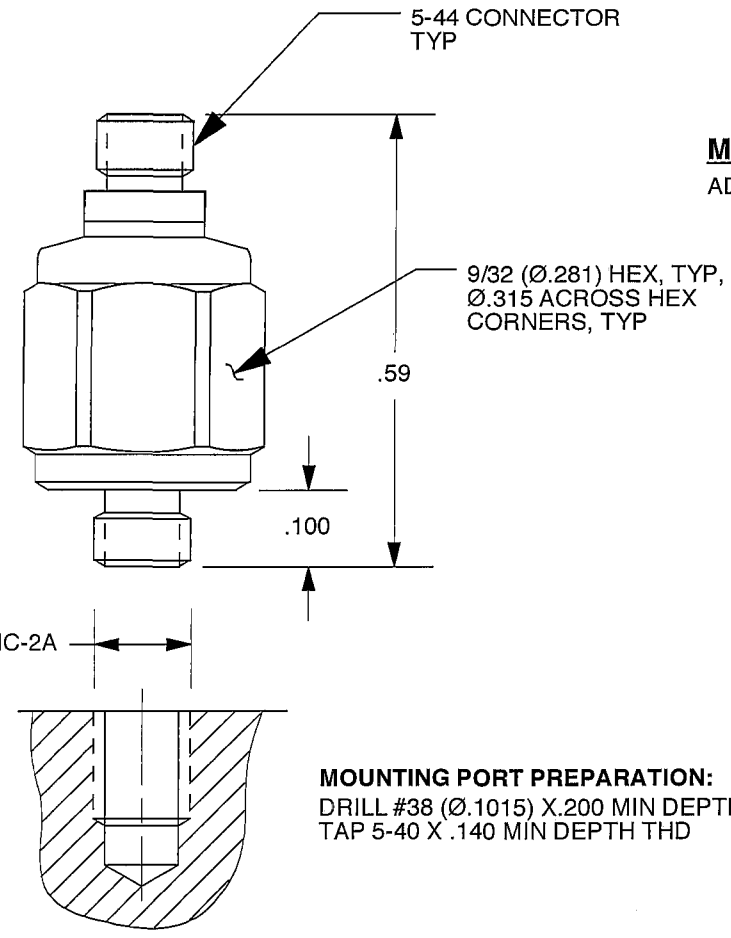

MODEL 3145AG
ADHESIVE MOUNT

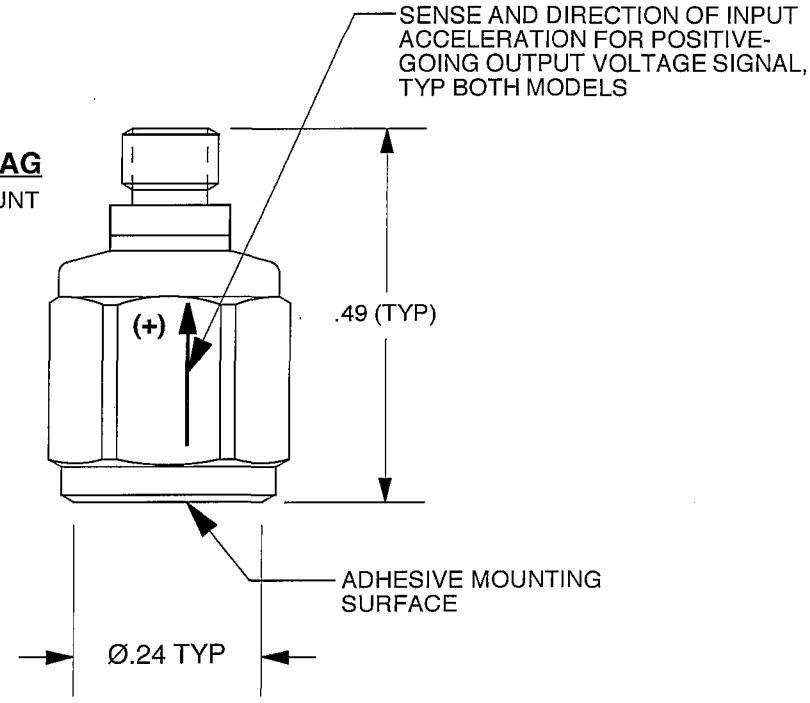

MOUNTING PORT PREPARATION:
DRILL #38 (Ø.1015) X.200 MIN DEPTH
TAP 5-40 X .140 MIN DEPTH THD

5. SUGGESTED ADHESIVE TYPE FOR MODEL 3145AG-CYANOACRYLATE "INSTANT BOND".
4. TO INSTALL MOD 3145A, TORQUE IN PLACE WITH 10 lb-INCHES.
3. WEIGHT-MOD 3145A-2.3 GRAMS
   MOD 3145AG-2.1 GRAMS
2. SEAL-HERMETIC, ALL WELDED.
1. MATERIAL: 304L STAINLESS STEEL

EXCEPT AS OTHERWISE NOTED
ALL DIMENSIONS IN INCHES
TOLERANCE: .XXX = ± .XX= ± .01
SURFACE FINISH EXCEPT AS NOTED √
BREAK EDGES TO DEBURR RADIUS OR CHAMFER
THESE DIAS ⊙ TO T.I.R.
FILLETS - MAX RAD.

DYTRAN INSTRUMENTS, INC. CHATSWORTH, CA.

MASTER ONLY IF IN RED

SCALE 4X	REV -	DATE SEE REV BLK	ECN -
DATE 3/28/00	PART NO.		
DRAWN N.C. / CHECKED R.A.	MAT'L		
APPROVED N.C. 2/10/03	NEXT ASSEMBLY	USED ON	
TITLE **OUTLINE/INSTALLATION DRAWING MODELS 3145A & 3145AG**		DWG NO. **127-3145A**	SHEET OF 1

Model Number 3145A	PERFORMANCE SPECIFICATIONS	DOC NO PS3145A
	IEPE ACCELEROMETER	REV D, ECN 14478, 09/11/18

- **MINIATURE DESIGN**
- **HERMETICALLY SEALED**

	ENGLISH		SI	
PHYSICAL				
Weight	0.08	oz	2.3	grams
Connector	5-44 Coaxial		5-44 Coaxial	
Mounting Provision	Integral Stud 5-40 UNC-2A		Integral Stud 5-40 UNC-2A	
Material, Housing/Connector	300 Series S.S.		300 Series S.S.	
Sensing Element	Ceramic		Ceramic	
Element Style	Crystal Shear Mode		Crystal Shear Mode	
PERFORMANCE				
Sensitivity, ±10% [1]	100	mV/g	10.19	mV/m/s^2
Range for ± 5 Volts Output	50	g	491	m/s^2
Frequency Response, ± 5%	1 to 7,000	Hz	1 to 7,000	Hz
Frequency Response, ± 10%	0.8 to 10,000	Hz	0.8 to 10,000	Hz
Resonant Frequency	> 45	kHz	> 45	kHz
Equivalent Electrical Noise Floor	0.0004	Grms	0.004	m/s^2 rms
Linearity, [2]	±1	% F.S.	±1	% F.S.
Maximum Transverse Sensitivity	5	%	5	%
Strain Sensitivity @ 250με	0.002	g/με	0.02	m/s^2/με
ENVIRONMENTAL				
Maximum Vibration	600	Gpeak	5886	m/s^2 peak
Maximum Shock	3000	Gpeak	29430	m/s^2 peak
Temperature Range	-60 to +200	°F	-51 to +93	°C
Seal	Hermetic		Hermetic	
ELECTRICAL				
Supply Current Range [3]	2 to 20	mA	2 to 20	mA
Compliance Voltage Range	+18 to +30	Volts	+18 to +30	Volts
Output Impedence,Typ	100	Ω	100	Ω
Bias Voltage	+11 to +13	VDC	+11 to +13	VDC
Discharge Time Constant	0.5 to 2.0	Sec	0.5 to 2.0	Sec
Output Signal Positive for	Positive		Positive	
Ground Isolation	Case Ground		Case Ground	

This family also includes:

Model	Sensitivity (mV/g)	Frequency Response (Hz)	Time Constant (Sec)	Operating Temp (°F)

Refer to the performance specifications of the products in this family for detailed description

Supplied Accessories:

1) Accredited calibration certificate (ISO 17025)

Notes:

[1] Measured at 100Hz, 1 Grms per ISA RP 37.2.

[2] Measure using zero-based straight line method, % of F.S. or any lesser range.

[3] Do not apply power to this system without current limiting, 20 mA MAX. To do so will destroy the IC charge amplifier.

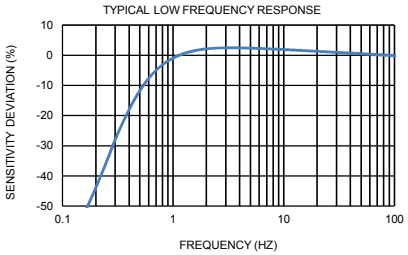

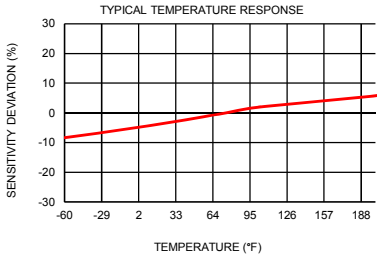

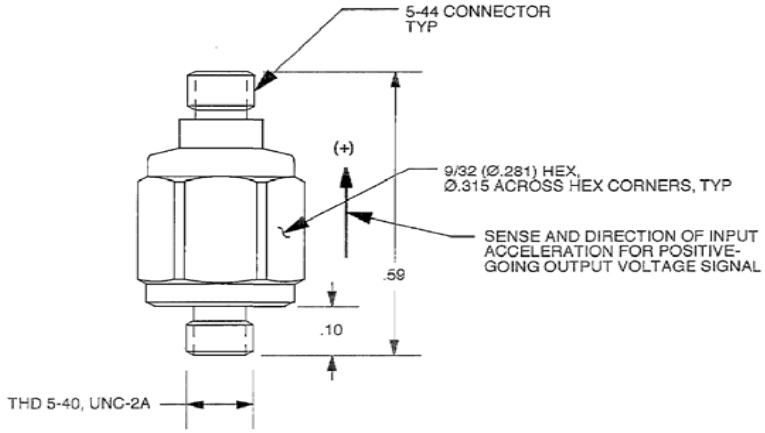

Units on the line drawing are in inches, units in brackets are in millimeters. Refer to 127-3145A for more information.

DYTRAN INSTRUMENTS, INC.
21592 Marilla Street, Chatsworth, California 91311 Phone: 818.700.7818 Fax:818.700.7880 www.dytran.com
For permission to reprint this content, please contact info@dytran.com